AJA Driver Installation

DATE	6/12/2022
PRINCIPAL AUTHOR	Steve Hart/Peter Eszlari/Jerry Clark
VERSION	1.2

1.0 Installation

The Installation for the AJA driver is fairly straight forward on a new machine. If you are re-installing or updating then refer to the uninstall section below before attempting a reinstall/update.

Locate the appropriate driver from the RTSoftware FTP release site. Always use the version that is available with your currently installed version of Swift/Tactic.

DO NOT INSTALL AN AJA DRIVER FROM THE AJA WEB SITE UNLESS EXPLICITLY DIRECTED TO BY RTSW SUPPORT

These are located at

https://ftp.rtsw.co.uk

You will need an authorised login to access this site. If you do not have one then please contact support@rtsw.co.uk.

1.1 Windows Install

Once logged on, navigate to the appropriate release location.

For Swift:

`Downloads/Releases/4.6.5/4.6.5_r30014/Windows-X86_64`

The AJA driver install will have the following form:

Ajadriver-16.2.0-windows-installer.exe

For Tactic:

`Downloads/Releases/6.0.0/6.0.0_r30236/Windows-X86_64`

The AJA driver install will have the following form

Ajadriver-16.0.0-windows-installer.exe

Download the executable to a suitable location on your machine and run it.

You will be presented with a set of dialogs as follows

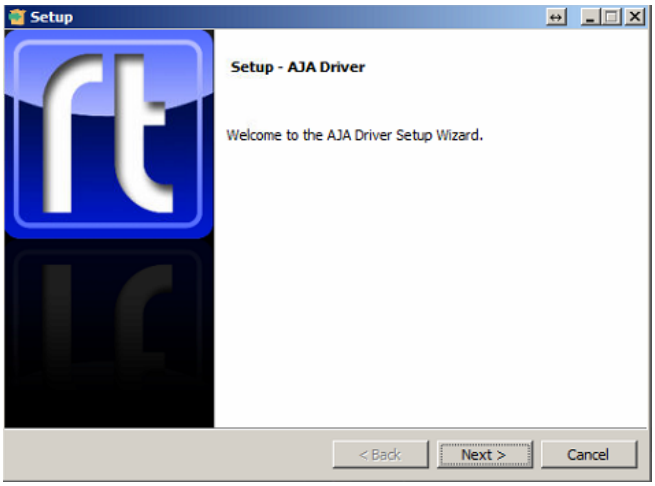

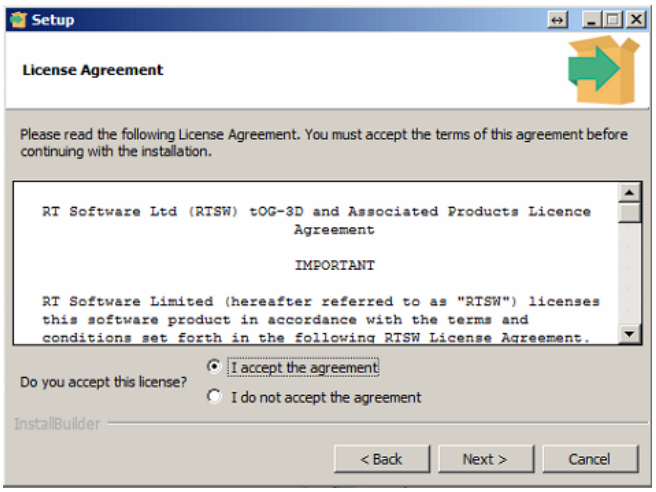

1. Press Next….
2. Accept the agreement and press Next…

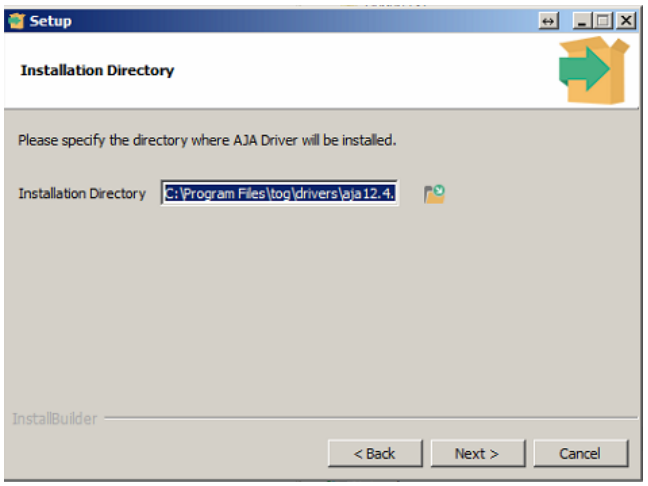

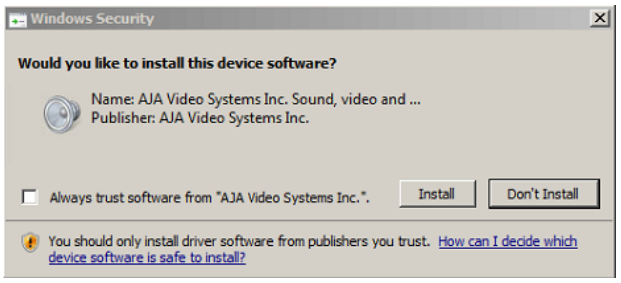

1. Unless you have been instructed, press Next to accept the default install directory…
2. Press Next again to start the install….
3. When you see this….
4. Press Install. You will see one of these for each AJA board you have installed…
5. Press Finish to complete the installation.
6. See 'Checking install' to check your driver is installed and can see your AJA board.

1.2 Windows 7 Security Update

If you are installing on a fairly old version of Windows 7 you may encounter an issue where the driver seems to install but neither Cables (below) or Swift/Tactic will recognise this. You will be notified of this by an error when you install regarding driver not signed or certificate rejected.

The driver may appear in the device manager list but it will have a small yellow triangle over the top of it.

If this occurs you must either do a complete windows update or, alternatively, you can install the specific Windows 7 update.

KB3033929

This is available at

https://www.microsoft.com/en-gb/download/details.aspx?id=46148

1.3 Linux Install

AJA Cards are not yet qualified for Swift/Tactic under Linux.

2.0 Checking Install

2.1 Windows

To check that the driver is installed you can do 2 things:

1) Check that the device manager has listed it. Open the Device Manager. Look for an entry as shown below:

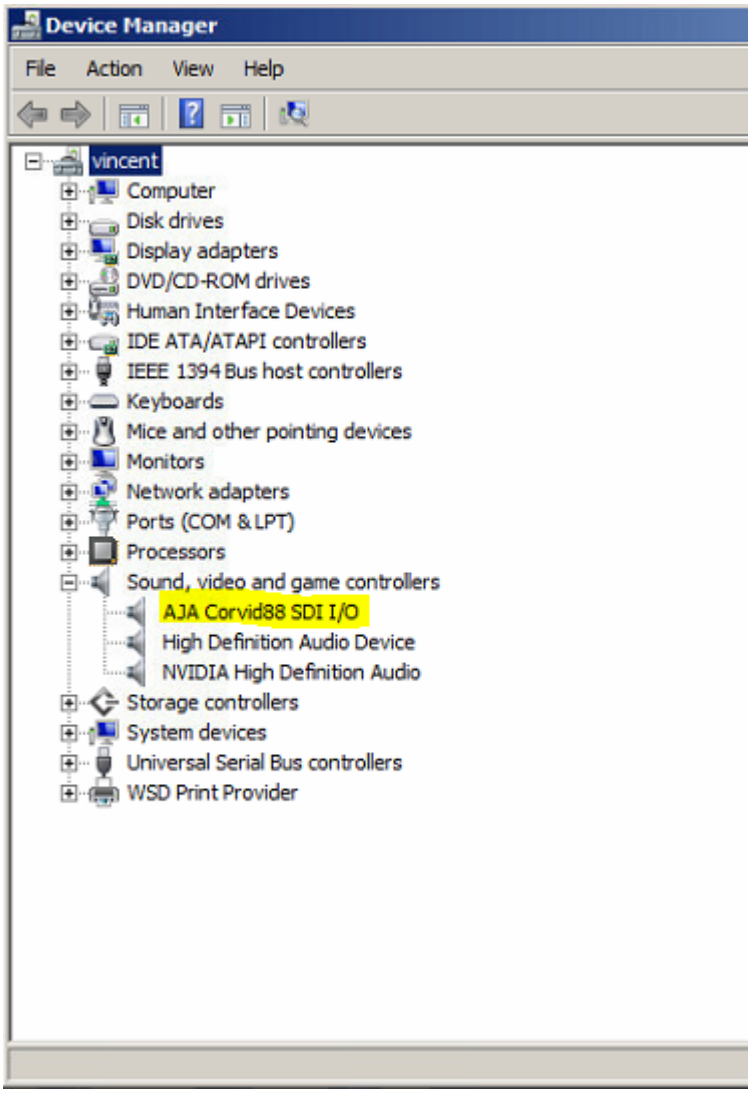

2) Check the 'Cables' program. Locate the cables.exe program. This should be located in

- `Swift:  C:\Program Files\tog\drivers\aja16.2.0\bin`
- `Tactic: C:\Program Files\tog\drivers\aja16.0.0\bin`

When you run this you will see something like the following:

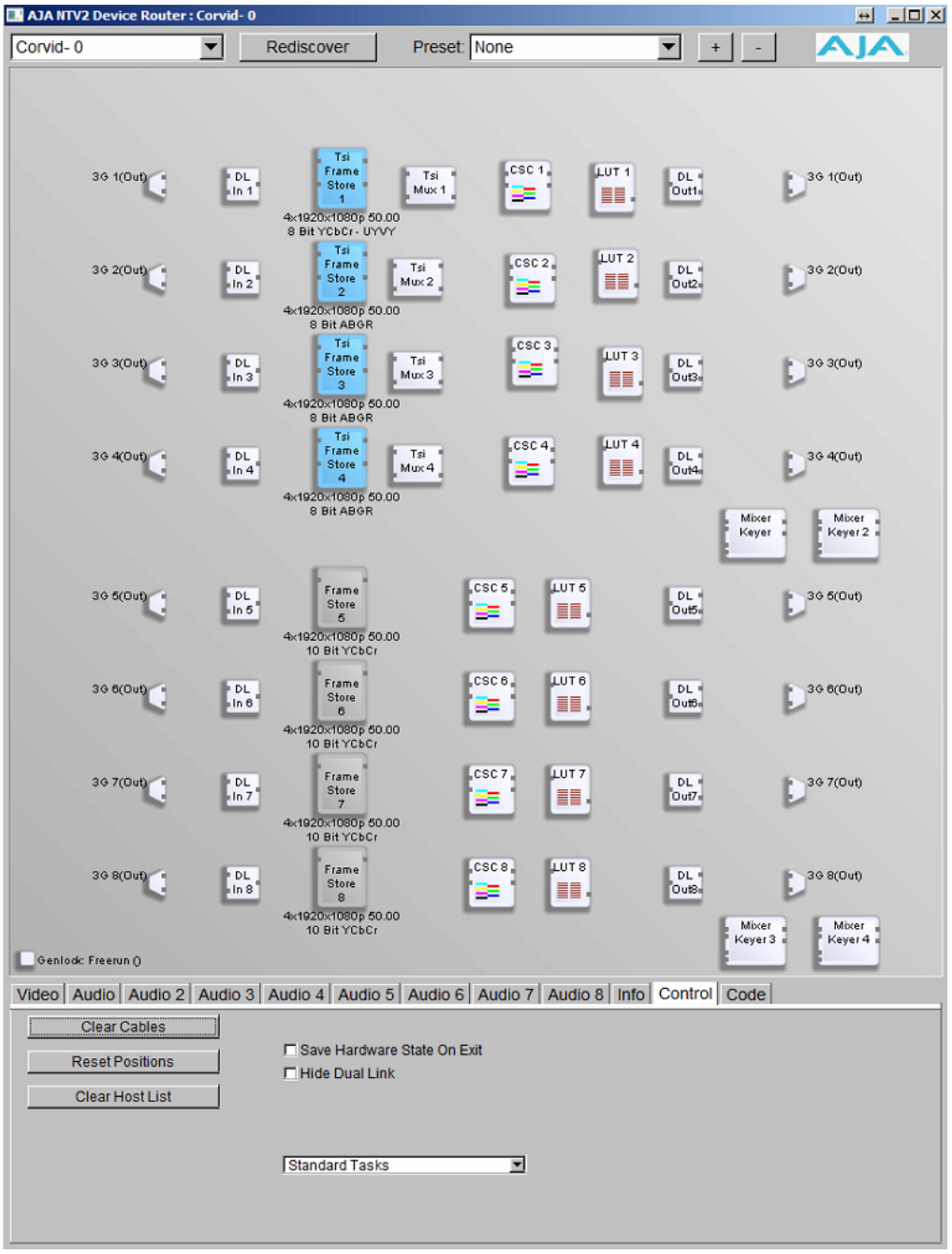

Note that the layout routing may differ. Don't worry about that. Check that the correct board is shown at the top. If you do not see this then press the Rediscover button. If you do not see this refer to the troubleshooting section below

2.2 Linux

AJA Cards are not yet qualified for Swift/Tactic under Linux.

3.0 Card configuration

3.1 Video formats supported by AJA in Swift

Depending on each AJA video card's capabilities the following video formats are supported by Swift. These can be set for the Input and Output stage separately via the Video tab of the Swift Preferences window.

Swift Preferences - Video tab

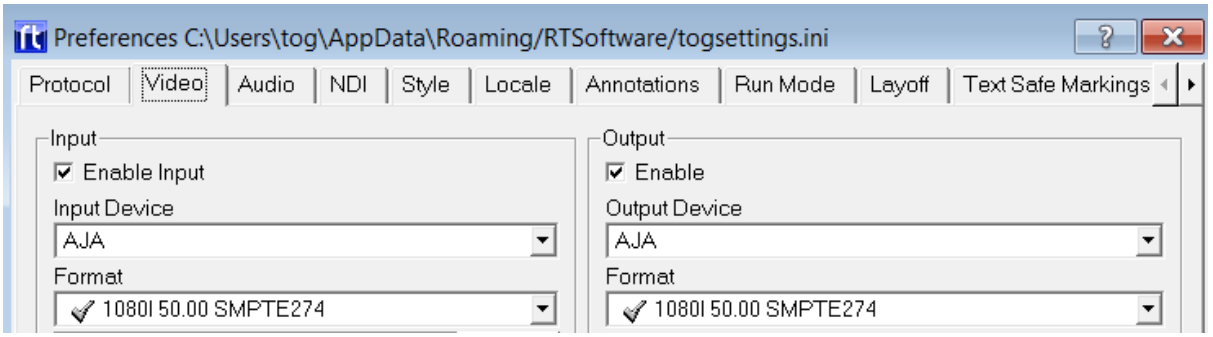

1. PAL
2. PAL Widescreen
3. NTSC
4. NTSC Widescreen
5. 720P 50.00 SMPTE296
6. 720P 50.00 SMPTE296
7. 720P 59.94 SMPTE296
8. 1080I 50.00 SMPTE274
9. 1080I 59.94 SMPTE274
10. 1080P 25.00 SMPTE274
11. 1080P 50.00 SMPTE274 (3G)
12. 1080P 29.97 SMPTE274
13. 1080P 59.94 SMPTE274 (3G)
14. 1080P 2K 50.00
15. 1080P 2K 59.94
16. 2160P 4K 25.00
17. 2160P 4K 29.97
18. 2160P 4K 50
19. 2160P 4K 5994

3.2 Video formats supported by AJA in Tactic

Depending on each AJA video card's capabilities the following video formats are supported by Tactic.

Tactic Preferences - Video menu:

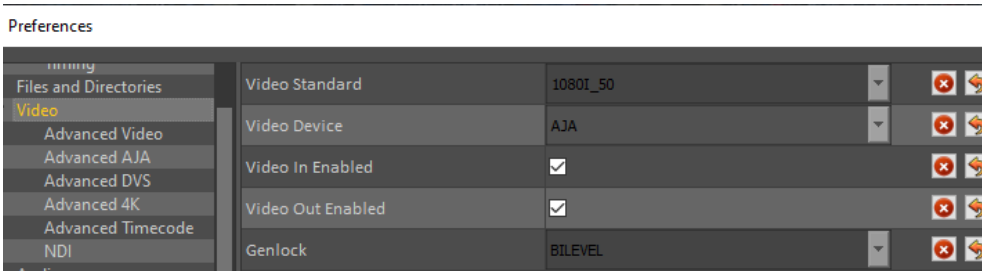

1. PAL
2. PAL Widescreen
3. NTSC
4. NTSC Widescreen
5. 720P 50.00 SMPTE296
6. 720P 50.00 SMPTE296
7. 720P 59.94 SMPTE296
8. 1080I 50.00 SMPTE274
9. 1080I 59.94 SMPTE274
10. 1080P 25.00 SMPTE274
11. 1080P 50.00 SMPTE274 (3G)
12. 1080P 29.97 SMPTE274
13. 1080P 59.94 SMPTE274 (3G)
14. 1080P 2K 50.00
15. 1080P 2K 59.94
16. 2160P 4K 25.00
17. 2160P 4K 29.97
18. 2160P 4K 50
19. 2160P 4K 5994

3.3 AJA i/o in Swift & Tactic

Swift/Tactic support multiple inputs and outputs depending on the chosen AJA card's capabilities and configuration settings.
Some AJA hardware have dedicated inputs and outputs while others have so called bidirectional connections where each SDI socket can be assigned to function either as an input or an output so the whole i/o layout depends on a given configuration. Swift/Tactic finds the installed AJA device automatically and knowing it's capabilities it will do this configuration based on basic user settings. In this case the given i/o layout can change completely between different settings, depending on how many inputs are selected or if there is a KEY output assigned.

3.3.1 Configuring AJA i/o in Swift/Tactic

In the Swift Preferences window there is an input and an output section on the Video tab. These include an enable option, a list of the supported video devices, number of input channels and key output enabled.

Swift Preferences - Video tab

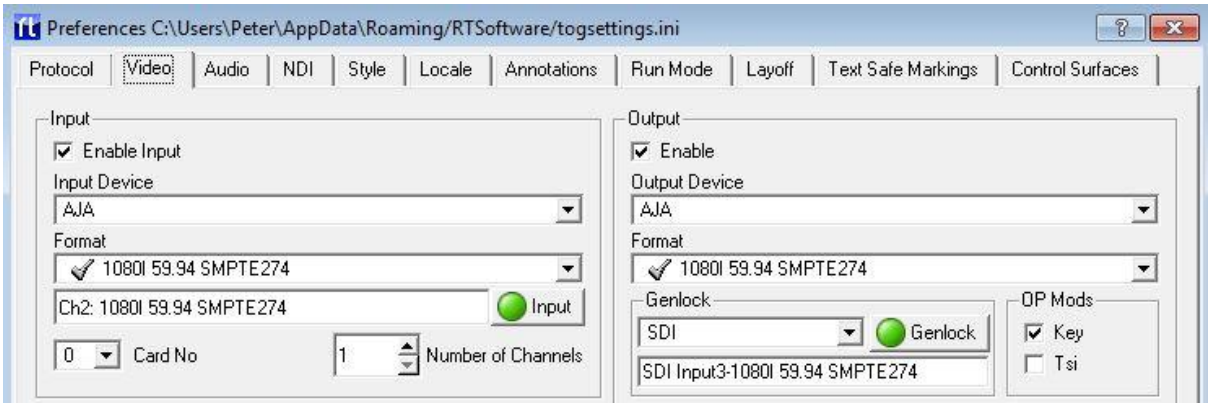

In the Tactic the number of input channels and the video card to use can be specified in the Advanced Aja menu:

Tactic Preferences - Advanced AJA

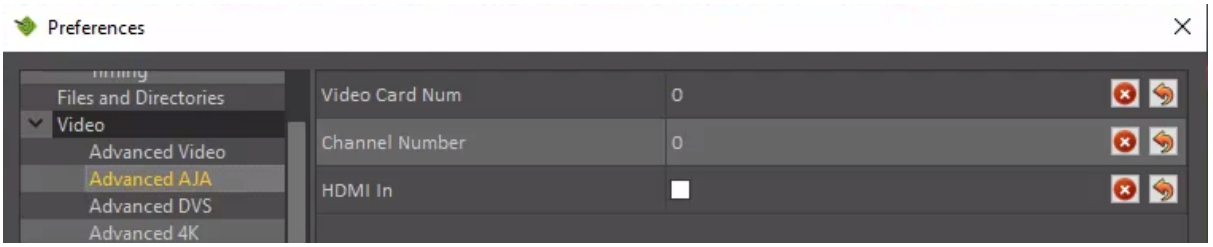

Further options and video output timings are available on Advanced Video menu:

Tactic Preferences - Advanced Video

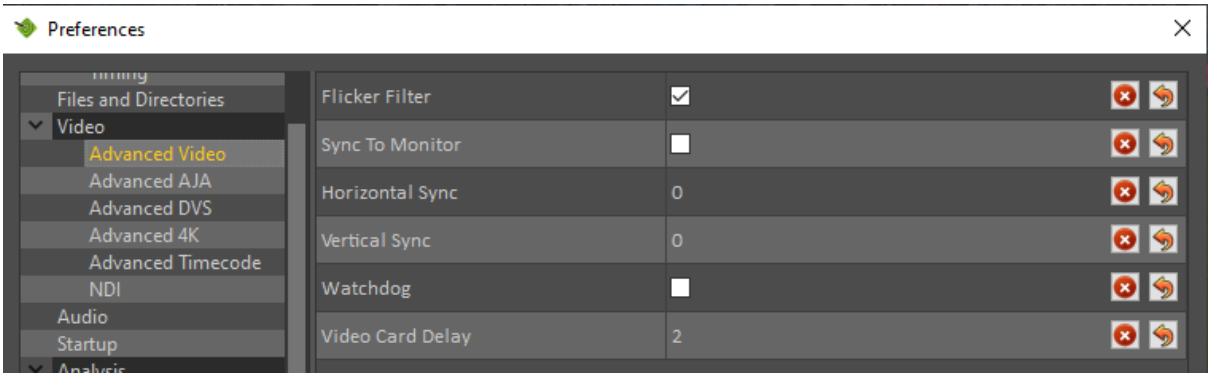

3.3.2 Example AJA configuration in Swift

Number of input channels

This depends on the installed AJA hardware's capabilities. The Aja Corvid-88 has the highest number, 8 SDI sockets assignable as inputs. In this setting there will not be any SDI sockets available for outputs. Consequently to have both HD Fill and Key outputs the maximum number of inputs will be 6 on this card. This logic is consistent across all bi-directional cards.

The maximum i/o capabilities of Swift on a single Corvid-88 card are these:

	Configuration 1	Configuration 2	Configuration 3
SD/HD/3G	8 IN	Fill OUT + 7 IN	Fill + Key OUT + 6 IN
4K	2 IN	Fill OUT + 1 IN	Fill + Key OUT

A number of AJA cards have dedicated i/o sockets whose function will not be changed by Swift. These can be observed on the tables below for each card.

Multiple AJA cards

It is possible to install and use multiple AJA cards in conjunction to achieve more inputs and outputs up to a maximum of 8 in/1 out(fil or fill+key) for SD/HD and 2in/1out (fil or fill+key) for 4k. A typical application of this would be in 4K format where the 4 sockets per channel configuration limits the i/o options.

Swift will configure the two cards' i/o automatically based on user settings in the Swift Preferences window i.e: how many inputs are set and whether there is KEY output selected.

The order of the cards in respect of the numbering order of the PCI sockets on the motherboard will determine the order of i/o.

Card combinations	Number of SDI sockets	4K FILL + 4K INPUTS	4K FILL + KEY + 4K INPUTS
Corvid 88 + Corvid 88	8 + 8 = 16	Card-1: FILL + IN-1 Card-2: IN-2 + IN-3	Card-1: FILL + KEY Card-2: IN-1 + IN-2
Corvid 88 + Corvid 44	8 + 4 = 12	Card-1: FILL + IN-1 Card-2: IN-2	Card-1: FILL + KEY Card-2: IN-1
Corvid 44 + Corvid 88	4 + 8 = 12	Card-1: FILL Card-2: IN-1 + IN-2	Card-1: FILL Card-2: KEY + IN-1
Corvid 44 + Corvid 44	4 + 4 = 8	Card-1: FILL Card-2: IN	Card-1: FILL Card-2: KEY

A setup example will be shown for this at the Corvid 88 section below.

4.0 Supported Cards

The following sections detail the current AJA card configurations supported. Note that you can extend capabilities using multiple cards as explained above

4.1 Kona-1 & Corvid-1 & 3G & 3G-LP

- SDI I/O: 1IN / 1 OUT, 3G - Non-bidirectional
- SDI Reference input: HD/SD Genlock, Reference Video or LTC Input (selectable via jumper)
- RS422 - dedicated connection for serial control (not available on Corvid 3G-LP)

Corvid 3G one IN one OUT

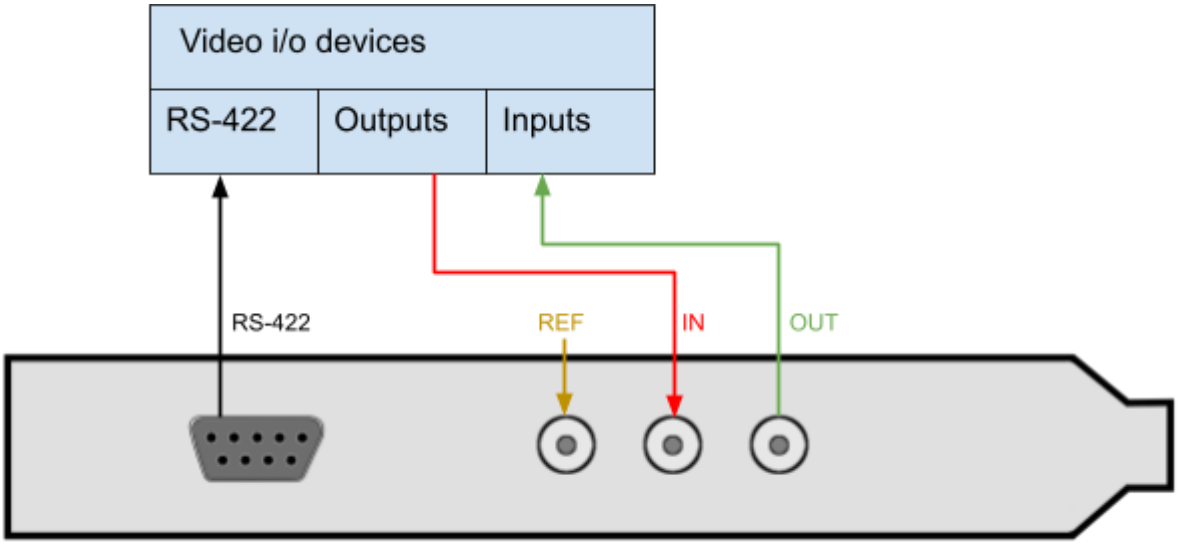

SDI I/O - 2x 3G Non-bidirectional	Single HD/SD
IN	IN-1
OUT	FILL

4.2 Corvid 22 (now not supported)

- SDI I/O: pre-configured by Swift/Tactic to 1-IN + 2-OUT (Fill+Key)
- Dedicated outputs can be used as fill/key
- SDI Reference input
- RS422 - accessible via breakout cable
- Break-out cable:
  - LTC IN 1/2
  - LTC OUT 1/2
  - RS422 Channel ½

See **Appendix-A** for a detailed diagram of the 102953 breakout cable.

Corvid 22 with KEY output

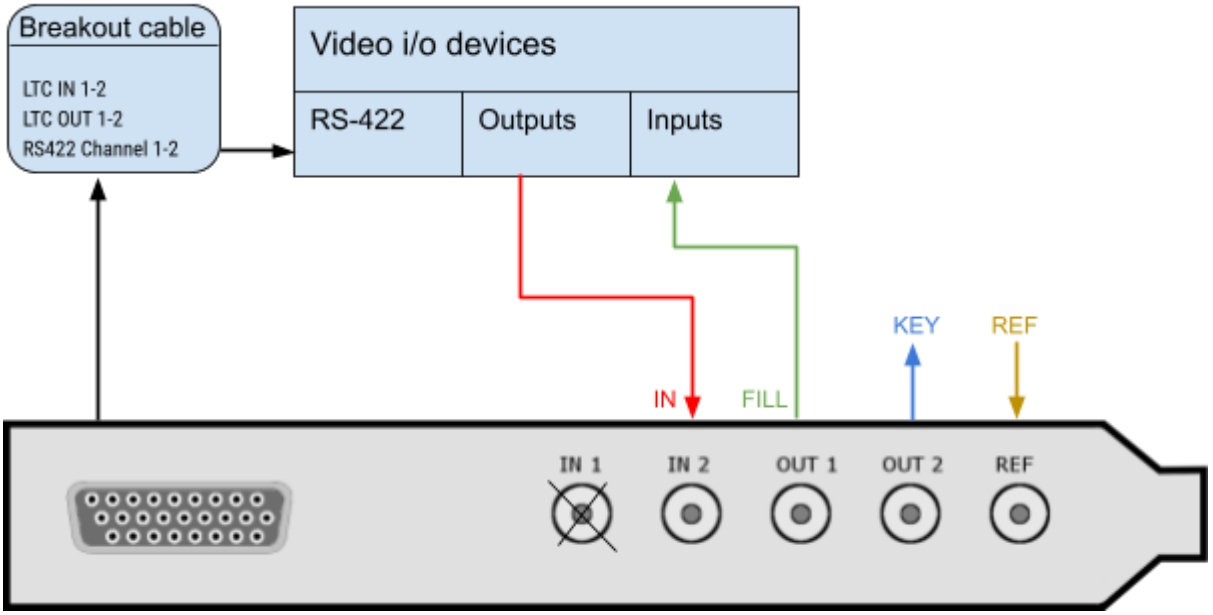

SDI I/O - 4x 3G Non-bidirectional	HD/SD FILL+KEY	HD/SD No-KEY
IN-1	Not used	Not used
IN-2	IN-1	IN-1
OUT-1	FILL	FILL
OUT-2	KEY	Not used

4.3 Corvid 24 (discontinued)

- SDI I/O: 4x SD/HD/3G bidirectional
- Preconfigured outputs can be used as fill/key
- SDI Reference input
- RS422 - accessible via breakout cable
- Input bypass relays/Watchdog
- Break-out cable:
  - LTC IN 1/2
  - LTC OUT 1/2
  - RS422 Channel 1/2

See **Appendix-A** for a detailed diagram of the 102953 breakout cable.

Corvid 24 with KEY output

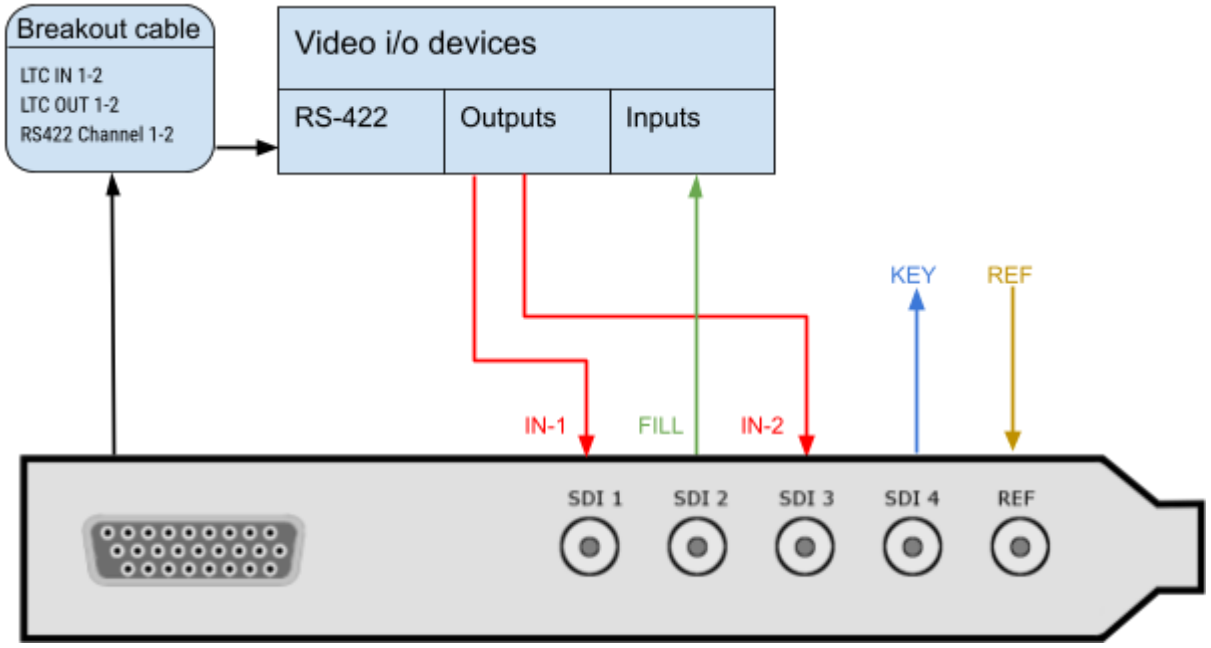

SDI I/O - 4x 3G bidirectional	HD/SD FILL+KEY One Input	HD/SD FILL+KEY Two Inputs	HD/SD No-KEY Two Inputs
SDI-1	IN-1	IN-1	IN-1
SDI-2	FILL	FILL	FILL
SDI-3	Not used	IN-2	IN-2
SDI-4	KEY	KEY	Not used

Input bypass relays / Watchdog

The **Corvid-24** has bypass relays on each SDI connector that can operate under software control or hardware control (using the built-in "watchdog" timer). If Watchdog is enabled in Swift, it will enable the bypass if the system becomes unresponsive or loses power.
However, by default the relays are enabled only if the card is powered down.
Please note - if the jumpers are enabled on the card then Watchdog MUST also be enabled in Swift.

Configuring Swift for Watchdog

The Watchdog enable option is found in **Swift Preferences** at the **Options** section of the **Video tab**. Swift needs to be restarted after saving these settings.

Swift Preferences Video tab - Watchdog enabled

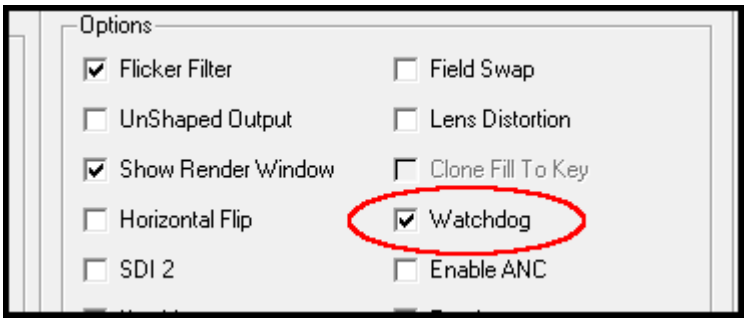

Configuring the hardware

The **Corvid-24** has to be configured for Watchdog operation via jumpers found on the hardware component. Two jumpers on the upper left corner of the Corvid-24 card enable or disable control of the bypass relays. The top jumper controls the bypass route between connectors SDI-1 and 2. When the jumper is set at the rightmost position the input signal delivered to SDI-1 will output through SDI-2. The same way, the bottom jumper controls the bypass between SDI-3 and 4.
When a jumper is in the leftmost position, the corresponding bypass relays are disabled, therefore this is the same routing as AJA boards without relays.

Corvid-24 hardware jumper settings

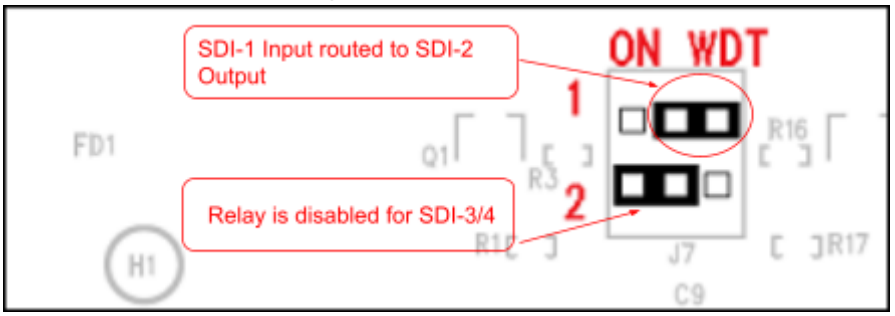

4.4 Corvid 44

- SDI I/O: 4x 3G bidirectional OR single 4K OUT
- Preconfigured outputs can be used as fill/key
- SDI Reference input
- Can be used in conjunction with another Corvid 44 or a Corvid 88 to achieve more inputs and outputs or 4K inputs. See the Corvid 88 diagrams.

Corvid 44 with KEY output

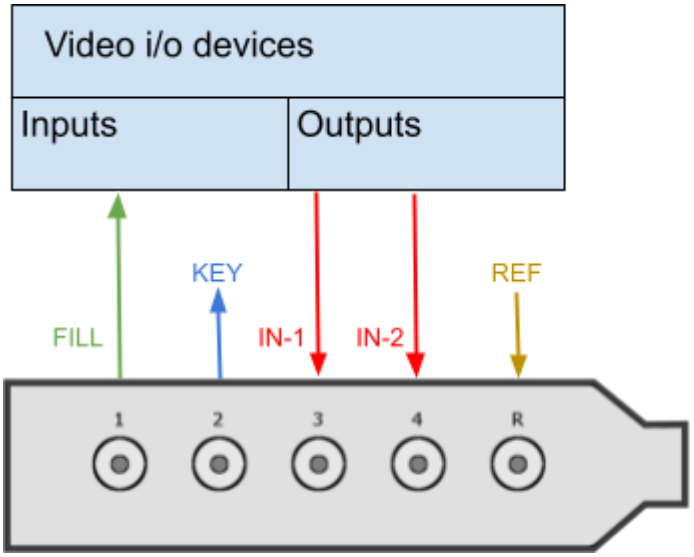

SDI I/O	HD/SD No-KEY	HD/SD FILL+KEY	Single 4K OUT
SDI-1	FILL	FILL	4K FILL - cable1
SDI-2	IN 1	KEY	4K FILL - cable2

SDI-3	IN 2	IN 1	4K FILL - cable3
SDI-4	IN 3	IN 2	4K FILL - cable4

4.5 Corvid 88

- SDI I/O: 8x 3G bidirectional OR single 4K IN+OUT
- Preconfigured outputs can be used as fill/key
- SDI Reference input
- RS422 - dedicated connection for serial control
- Can be used in conjunction with another Corvid 44 or a Corvid 88 to achieve more inputs and outputs or 4K inputs.

Corvid 88 in HD with KEY output

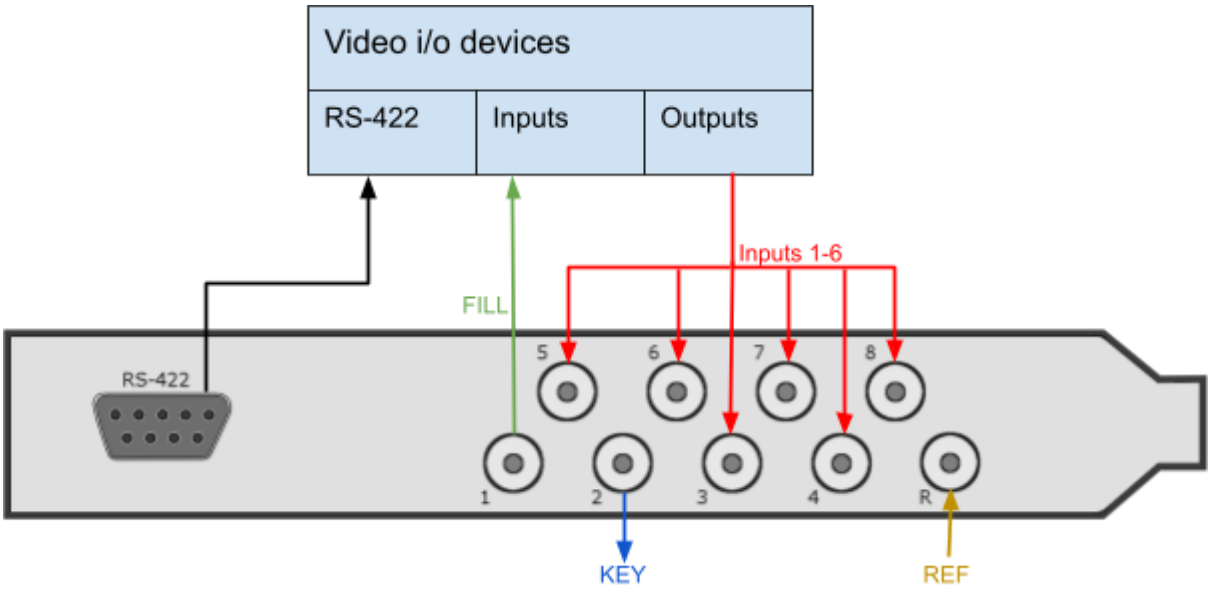

Corvid 88 in HD with FILL output only

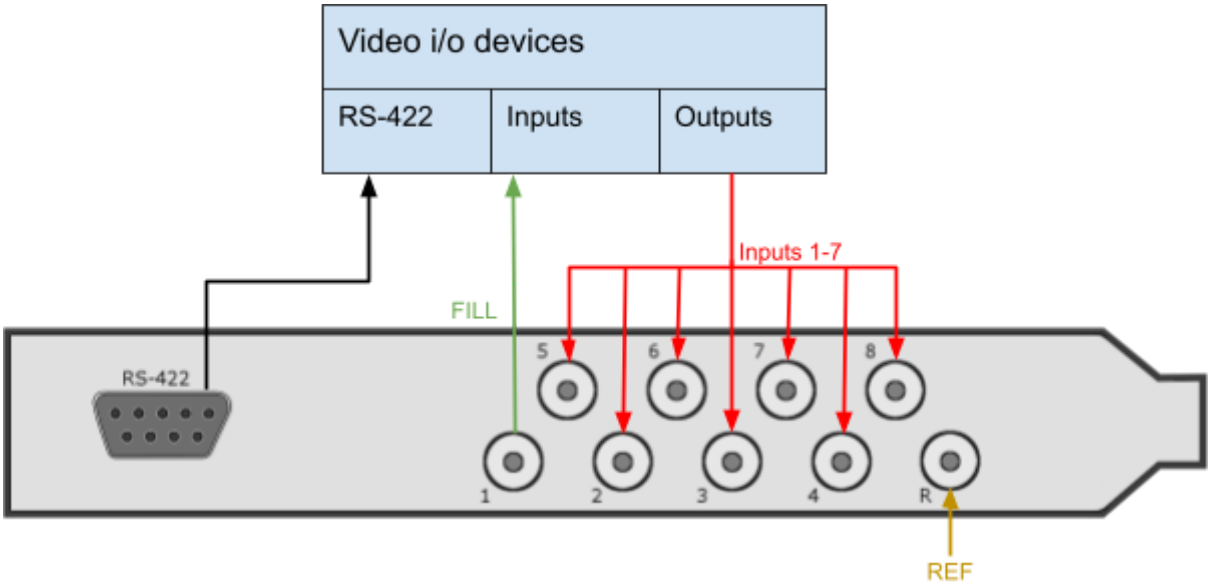

Corvid 88 in 4K with KEY output

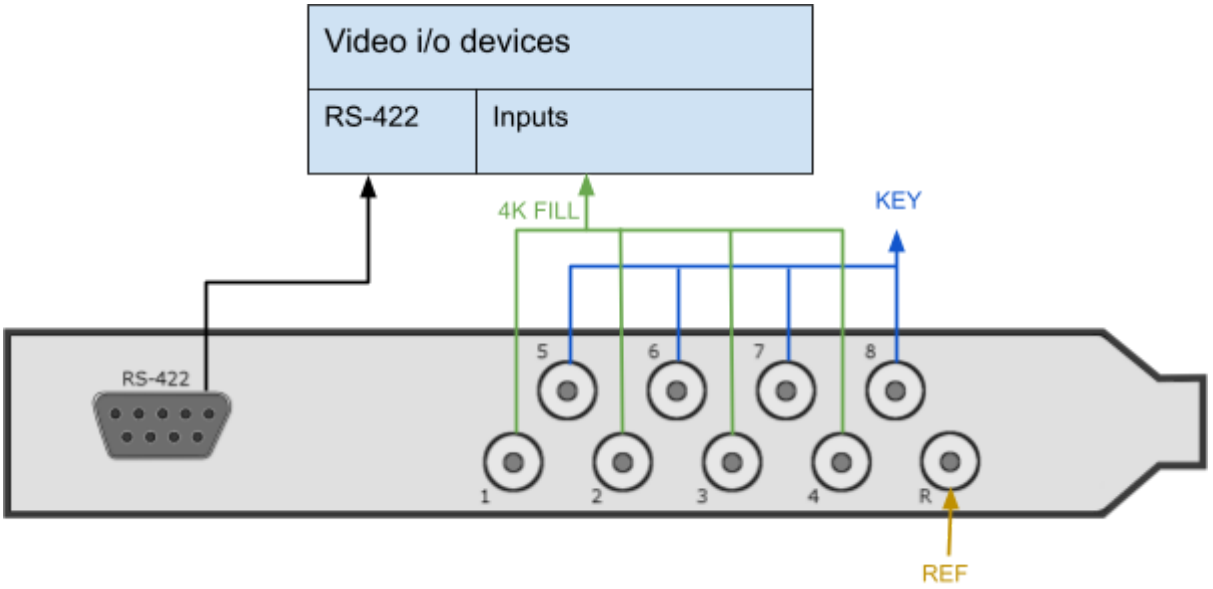

Corvid 88 in 4K with FILL output

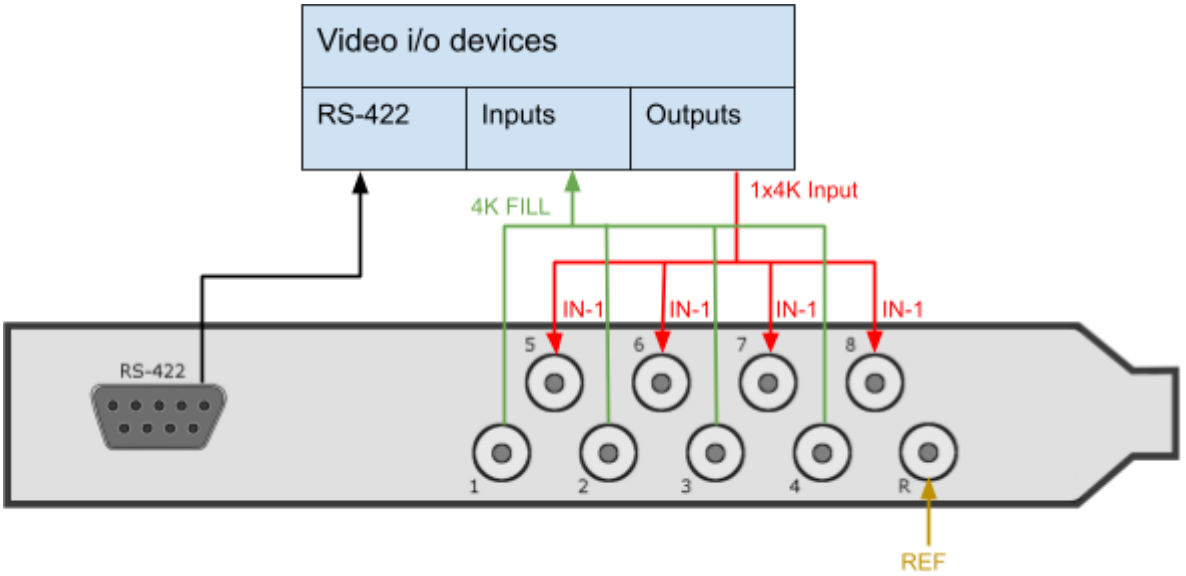

SDI I/O	HD/SD No-KEY	HD/SD FILL+KEY	4K FILL 4K Input	4K FILL+KEY
SDI-1	FILL	FILL	FILL-cable1	FILL - cable1
SDI-2	IN 1	KEY	FILL-cable2	FILL - cable2
SDI-3	IN 2	IN 1	FILL-cable3	FILL - cable3
SDI-4	IN 3	IN 2	FILL-cable4	FILL - cable4
SDI-5	IN 4	IN 3	IN 1 - cable1	KEY - cable1
SDI-6	IN 5	IN 4	IN 1 - cable2	KEY - cable2
SDI-7	IN 6	IN 5	IN 1 - cable3	KEY - cable3
SDI-8	IN 7	IN 6	IN 1 - cable4	KEY - cable4

Corvid 88 with a Corvid 44 in 4K with FILL + KEY output

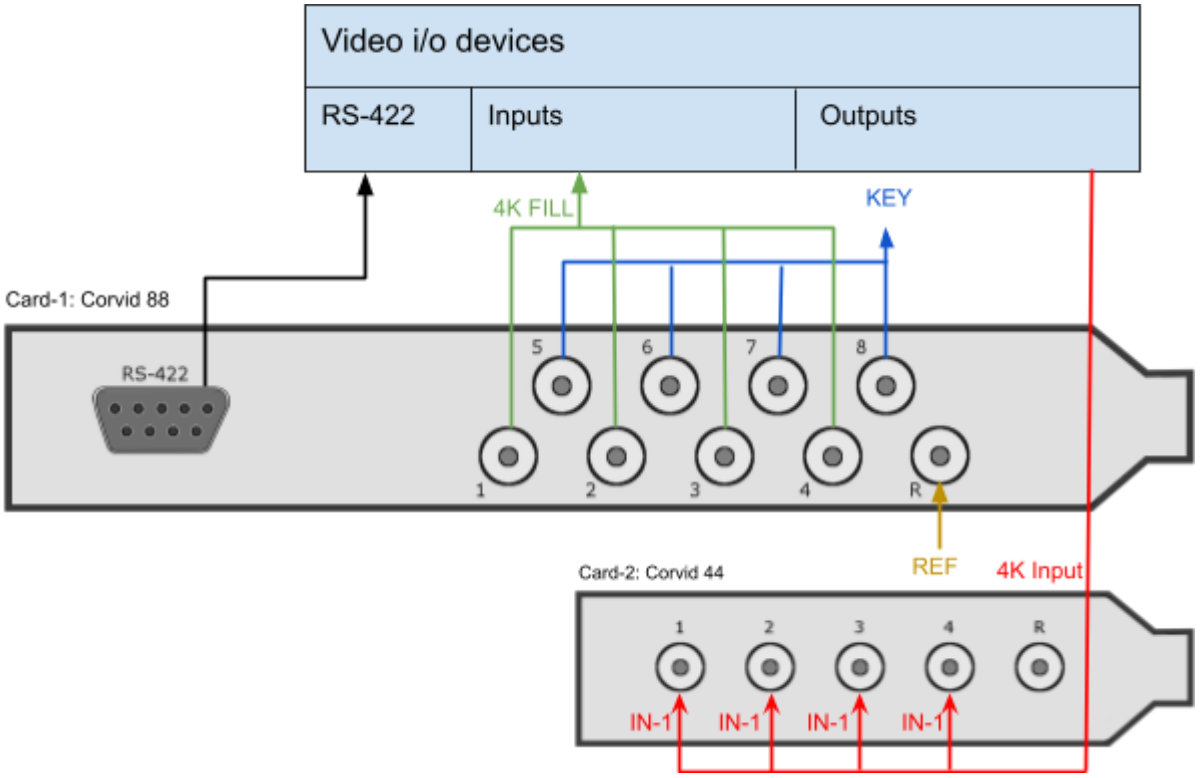

4.6 Kona-4

- SDI I/O: 4x 3G bidirectional OR single 4K OUT
- Preconfigured outputs can be used as fill/key
- RS422 - accessible via breakout cable
- HDMI OUT
- Break-out cable:
  - LTC IN 1/2
  - LTC OUT 1/2
  - RS422 Channel ½

See **Appendix-A** for a detailed diagram of the 103226 breakout cable.

Kona-4 with KEY output

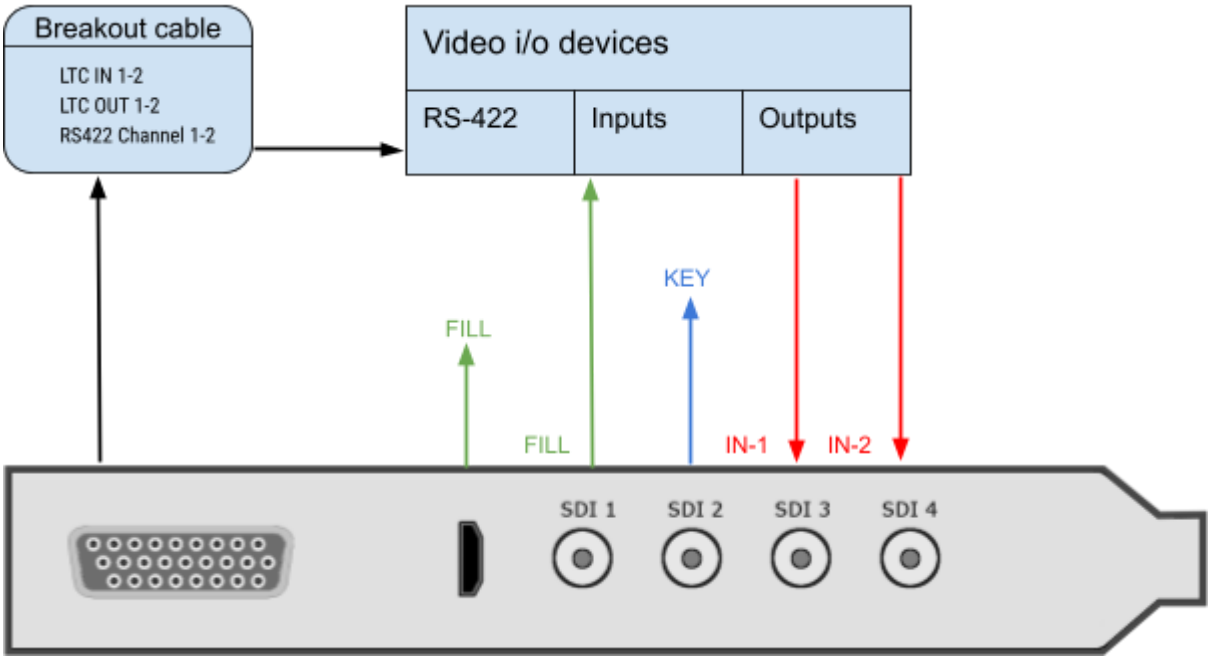

Kona-4 with FILL output only

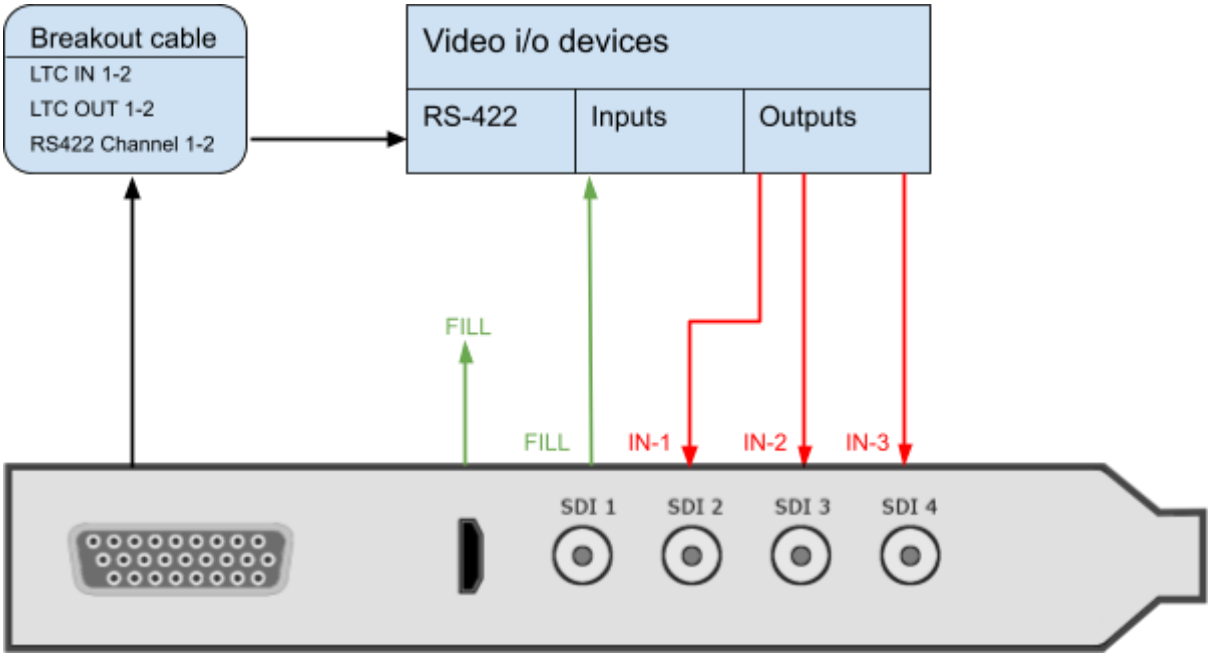

SDI I/O - 4x 3G bidirectional	HD/SD FILL+KEY Two Inputs	HD/SD No-KEY Two Inputs	Single 4K OUT
SDI-1	FILL	FILL	4K FILL - cable1
SDI-2	KEY	IN-1	4K FILL - cable2
SDI-3	IN-1	IN-2	4K FILL - cable3
SDI-4	IN-2	Not used	4K FILL - cable4

4.7 io-XT

- SDI I/O: pre-configured by Swift/Tactic to 1-IN + 2-OUT (Fill+Key)
- Dedicated outputs can be used as fill/key
- SDI Reference input
- RS422 - dedicated connection for serial control
- HDMI OUT

io-XT with KEY output

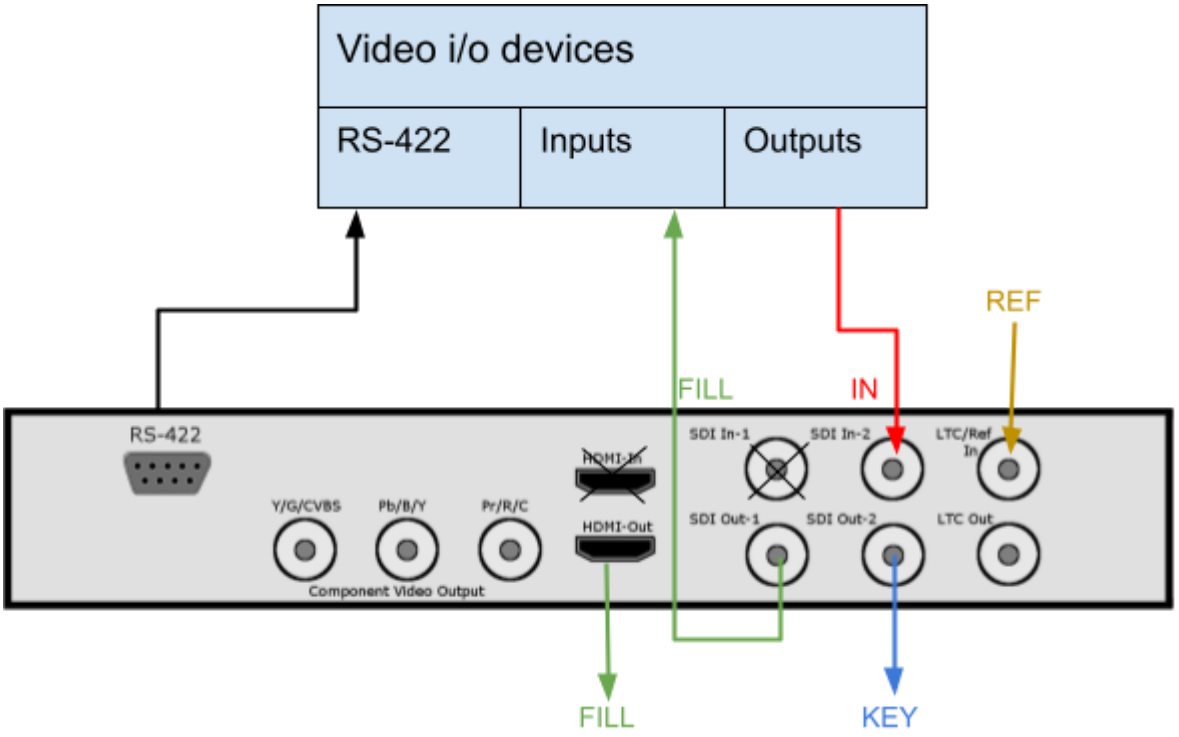

SDI I/O - 4x 3G Non-bidirectional	HD/SD FILL+KEY	HD/SD No-KEY
IN-1	Not used	Not used
IN-2	IN-1	IN-1
OUT-1	FILL	FILL
OUT-2	KEY	Not used

4.8 io-4K

- SDI I/O: 4x 3G bidirectional OR single 4K OUT
- Preconfigured outputs can be used as fill/key
- RS422 - dedicated connection for serial control
- HDMI OUT

io-4K with KEY output

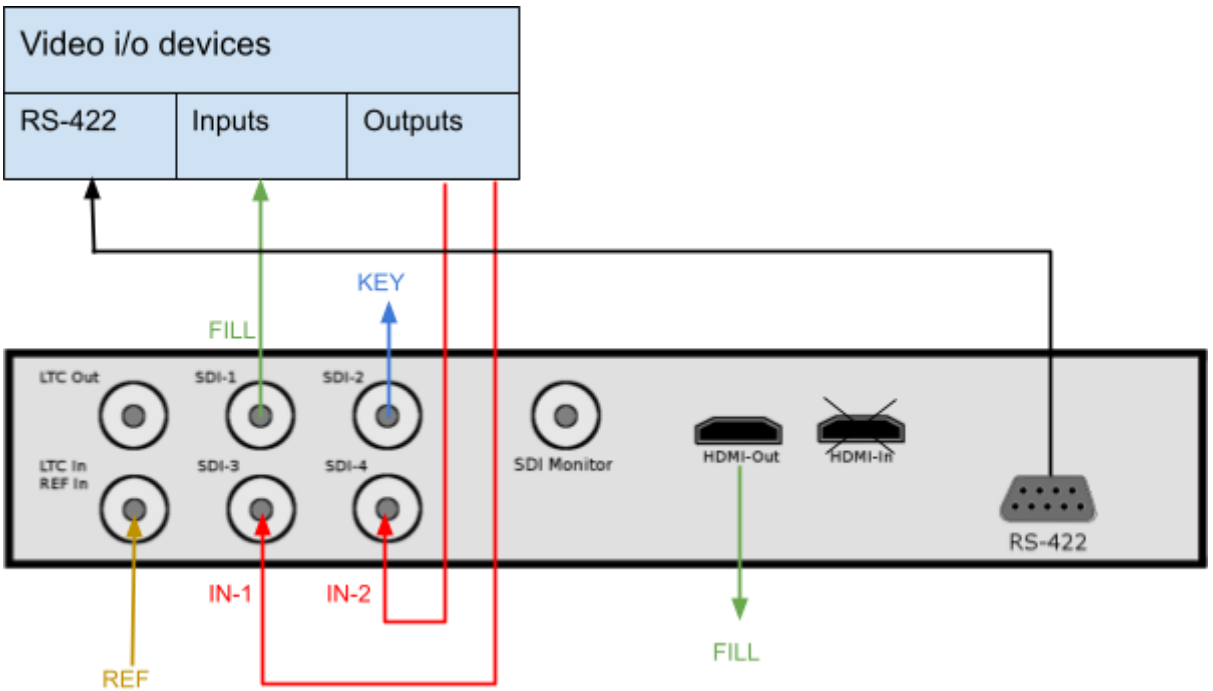

SDI I/O	Single HD/SD	HD/SD No-KEY	HD/SD FILL+KEY	Single 4K OUT
SDI-1	FILL	FILL	FILL	4K FILL - cable1
SDI-2	IN 1	IN 1	KEY	4K FILL - cable2
SDI-3	Not used	IN 2	IN 1	4K FILL - cable3
SDI-4	Not used	IN 3	IN 2	4K FILL - cable4

io-4K with 1x 4K fill output

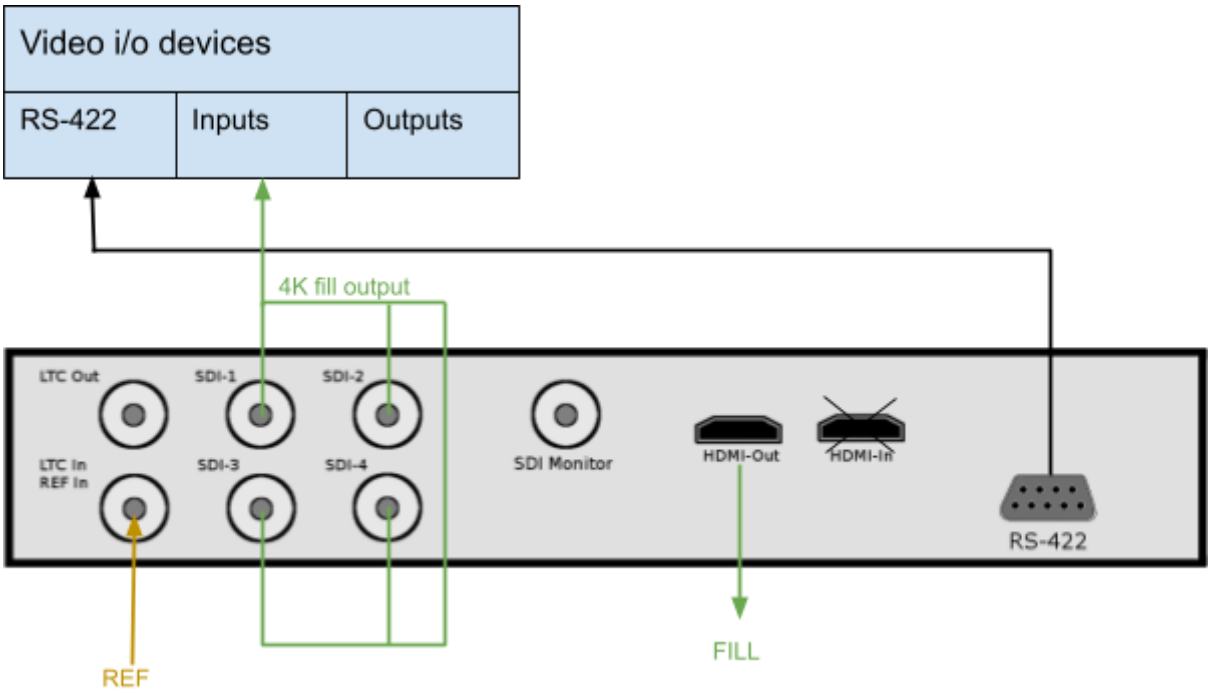

5.0 Uninstalling drivers

5.1 Windows

To uninstall the AJA Driver open up the Control Panel.

Locate the 2 AJA entries and uninstall both.

AJA Driver	RT Software	13/08/2016	28.4 MB	12.4.1.31
AJA NTV2 Drivers 12.4.1	AJA	13/08/2016	15.4 MB	12.4.1

Note that only 1 AJA driver can be resident on the machine at any one time. If you see more than 2 AJA Drivers then uninstall all of them. The entries are identified by either 'RT Software' or 'NTV2 Drivers'

Locate the directory

C:\Program Files\tog\drivers

Remove any entries starting with 'aja'

5.2 Linux

AJA Cards are not yet qualified for Swift/Tactic under Linux.

6.0 Updating Firmware

Updating AJA firmware should only be carried out by a competent engineer who has a full understanding of the process.

A FIRMWARE UPGRADE FAILURE CAN RESULT IN AN INOPERABLE BOARD REQUIRING FACTORY RESET. DO NOT ATTEMPT THIS IN A TX ENVIRONMENT UNLESS YOU HAVE SPARES

6.1 Checking your current firmware version

Refer to Section 2 to run up the Cables program. Once this is running locate the 'Info' tab.

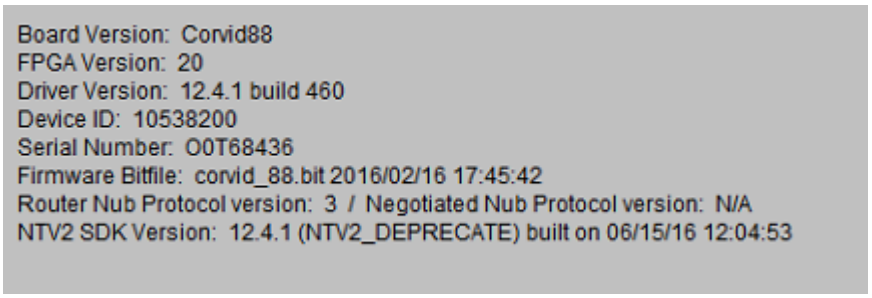

The firmware version is the 'Firmware Bitfile' and will consist of a Board name and a time/date stamp.

6.2 Windows.

You will have received a firmware bundle zip from RTSoftware. Unzip this in an appropriate location. Inside you will see 2 files:

pciburner.exe

This is the firmware burner.

corvid_88_2-16-16.bit

This is the updated bitfile.

Check the date of this bitfile with that reported in section 4.1. If this one is the same date or older then do NOT upgrade.

If it is newer then run up the pciburner.exe program

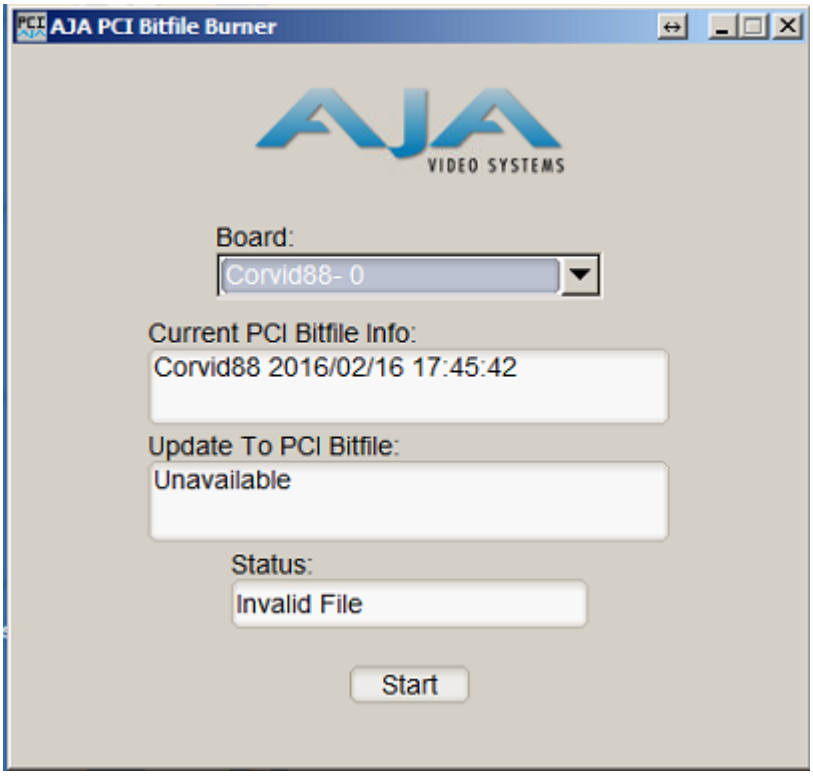

This should identify your board. If you have more than one board then you will need to repeat this process for each board you have.

YOU MUST COLD BOOT BETWEEN EACH UPDATE.

Again, check the Current PCI Bitfile is older that the one supplied.

Now, drag the update bitfile onto the textfield below 'Update to PCI Bitfile'.

If this works then you should be able to press Start.

ONCE THE UPDATE STARTS DO NOT INTERUPT IT UNTIL PROMPTED TO COLD BOOT THE MACHINE.

To Cold Boot you must power the machine down entirely. THIS IS VITAL. Wait 10 seconds and power the machine back up.

Repeat the process above to check that you firmware upgrade has worked and that the new firmware reported in 'cables' matches the one sent.

7.0 Troubleshooting

1) Cables does not show the card or device manager does not show the card

   Check that the driver is installed. Locate Control Panel. Select Uninstall program. You should see 2 entries as follows:

AJA Driver	RT Software	13/08/2016	28.4 MB	12.4.1.31
AJA NTV2 Drivers 12.4.1	AJA	13/08/2016	15.4 MB	12.4.1

   If these are not present then try re-installing the driver. If only one is present then uninstall and reinstall the drivers.

2) Problems with Swift/Tactic video in or out.

   If you experience issues with video in or out when running Swift/Tactic. First check the video preferences. Make sure that you have:

   a) Selected the correct Card for both out and in (If you are using i.p)
   b) That you have selected the correct sync type.
   c) That you see green LED on both video in and sync (Press the refresh button to make sure they are upto date.
   d) That you do not have Stereo selected.
   e) That the correct number of inputs are selected.

   Check both the video input and video output at the machine by connecting a scope or monitor directly to the cables going in or out of the PC.

Validating i/o setup and signals via the AJA Cables application

The Cables application shows the current state of the i/o configuration and the signals that are present at its inputs. Observing this makes it easy to determine how the SDI sockets are configured i.e.: which serves as **input, fill** or **key**. Beside text it uses color codes for the virtual cables that represent different signal formats.

A white cable means that there is an input configured on that SDI socket

but there is **no signal** present.

A colored cable indicates that there is an incoming signal in one of the following formats:

These color codes are also used for the input, output , framestore and other widgets.

Framestore widget indicates to what standard that input is configured	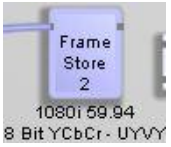
Input widget indicates the type of signal that is present on each SDI sockets	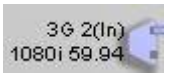
Output widgets on the right hand side indicate which SDI socket is configured as Fill/Key outputs	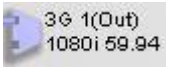

EXAMPLES

2 inputs and Fill + Key outputs

In the following example **SDI 1** and **2** are **Fill** and **Key** respectively. Fill and Key signals are split by a Color Space Converter widget, CSC1.

SDI 3-4 are configured as inputs and have valid HD signal present.

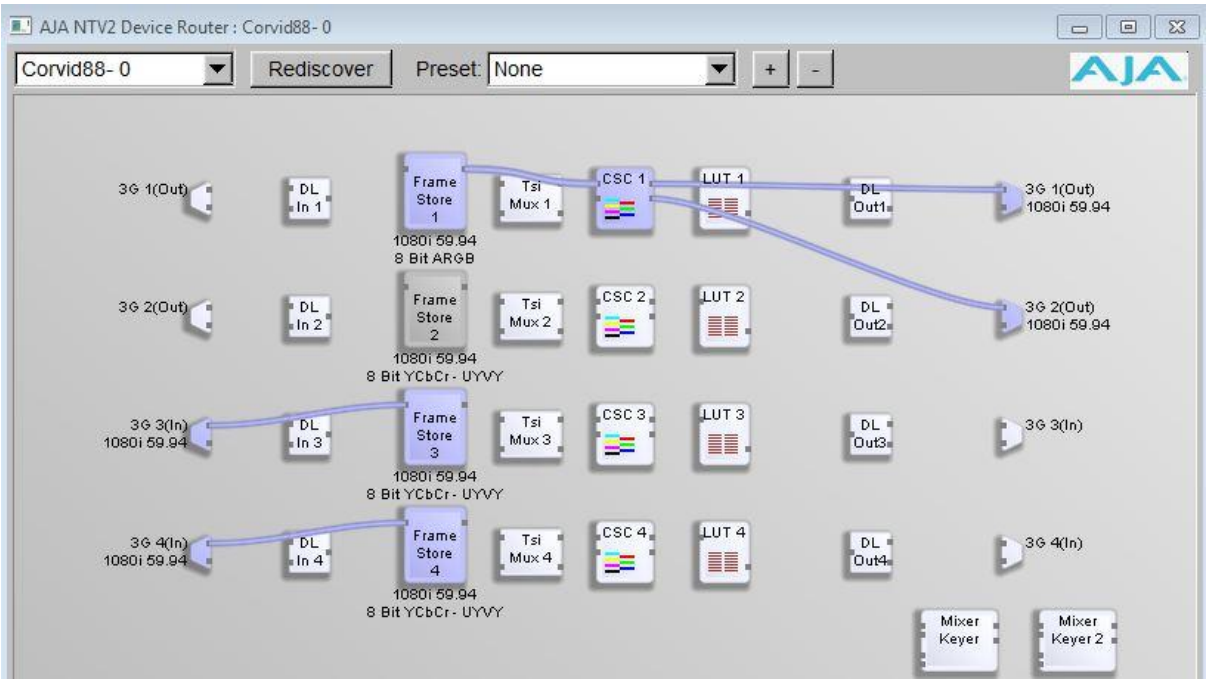

2 inputs and Fill output

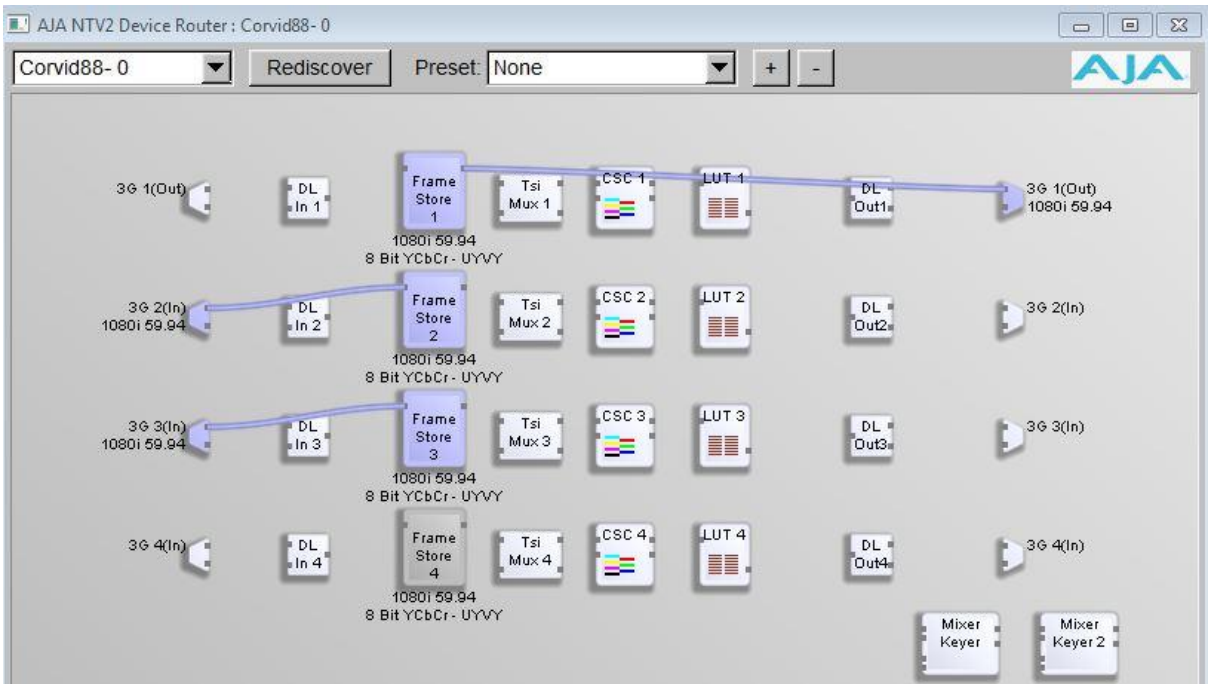

3 inputs configured with a Fill output only.

Output-1: SDI-1: Fill output
Input-1: SDI-2: HD signal format
Input-2: SDI-3: SD signal format, which is wrong in this setup
Input-3: SDI-4: no signal

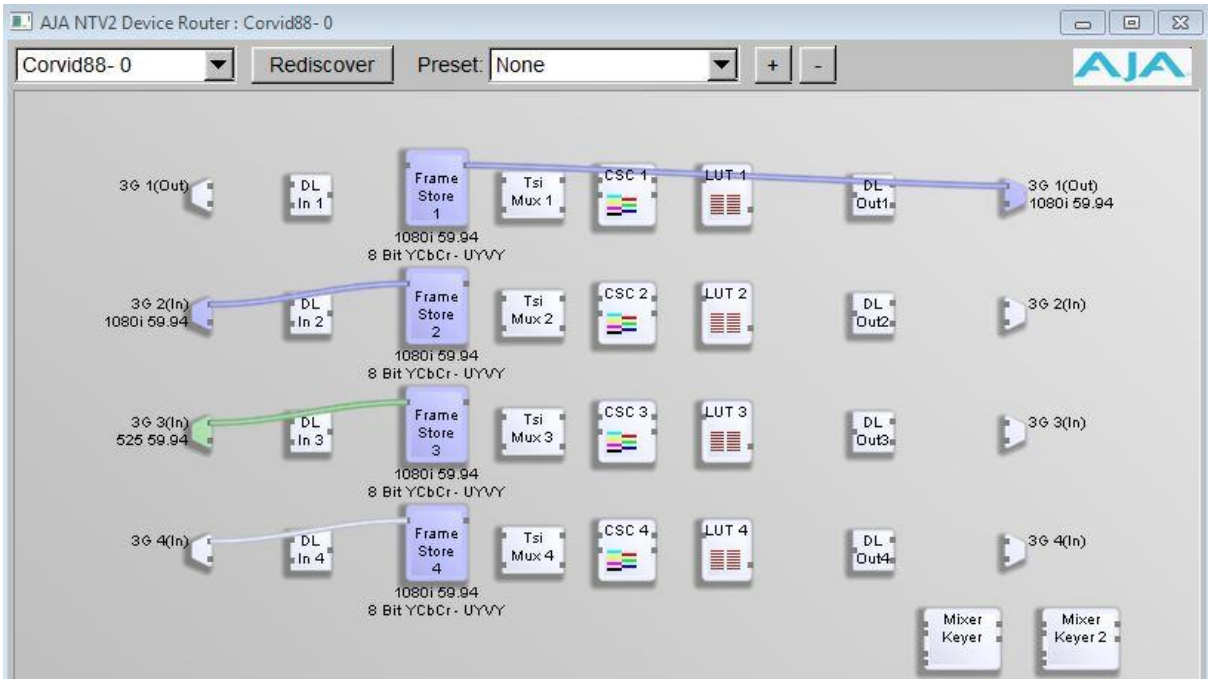

Selecting the video tab at the bottom section of the page also gives information about connections and signals present on the SDI sockets.

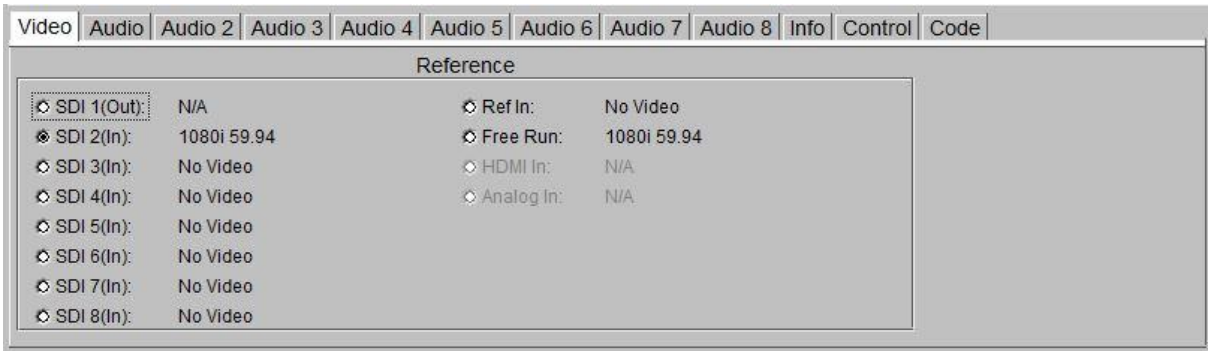

NOTE: Do not change the cable connections on the Cables application while Swift/Tactic is running.

8.0 Reporting Issues

When reporting issues please complete the following checks and provide the details requested. Create a folder 'AJA ISSUE" on the desktop to collect information into.

Make sure Swift/Tactic is running and experiencing the issue.

8.1 Preferences

Open the Swift/Tactic Preferences and locate the video tab. Use windows snip tool to snap shot this into the AJA ISSUE folder

8.2 AjA Log

Locate the 'supportlog.exe' utility located in

C:\Program Files\tog\drivers\ajaXX.XX.XX.XX\bin

Copy this to the desktop.

Run it - it will produce a file of the form

AJAWatcherSupport_0_1471089444.log

Collect this into the AJA ISSUE folder.

8.3 AjA Cables

Run up the cables program as detailed in Section 2.0. Use the Windows Snip tool to snapshot an image and save into the AJA ISSUE folder.

8.4 AjA Watcher

In the same location as the 'cables.exe' program you should also see a program marked 'watcher.exe'. Run this up and select the 'AutoCirculate' tab.

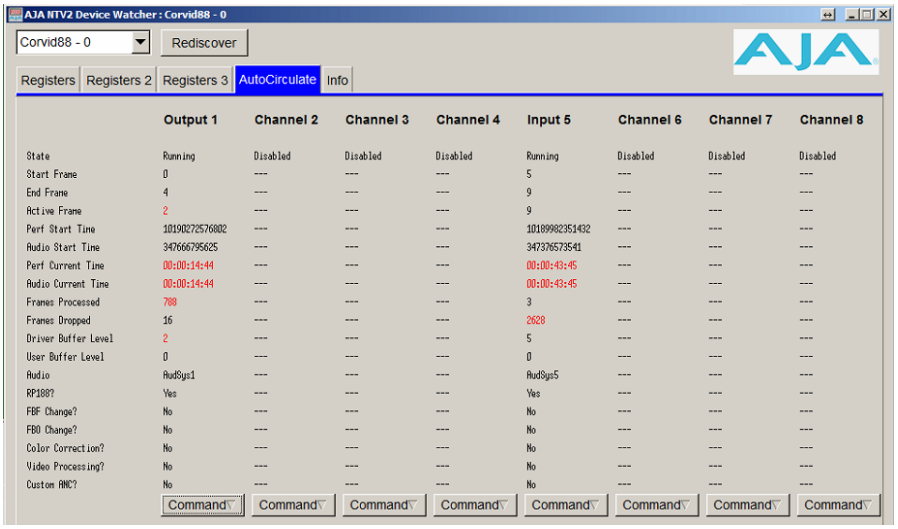

Use the snip tool to take 2 snapshots approximately 10 seconds apart. Save these into the AJA ISSUE folder.

8.5 AjA Internal buffers

While Swift/Tactic is running, press CTRL+ALT+F12. This will save a series of images into the User home directory, usually:

C:\Users\tog

VidIn_CudaRAW_Ch0.png	12/08/2016 21:12	PNG image	229 KB
VidIn_CudaRAW_Ch1.png	12/08/2016 21:12	PNG image	1 KB
VidIn_CudaRAW_Ch2.png	12/08/2016 21:12	PNG image	1 KB
VidIn_CudaRGBA_Ch0.png	12/08/2016 21:12	PNG image	349 KB
VidIn_CudaRGBA_Ch1.png	12/08/2016 21:12	PNG image	1 KB
VidIn_CudaRGBA_Ch2.png	12/08/2016 21:12	PNG image	1 KB
VidIn_PBO_Ch0.png	12/08/2016 21:12	PNG image	344 KB
VidIn_PBO_Ch1.png	12/08/2016 21:12	PNG image	1 KB
VidIn_PBO_Ch2.png	12/08/2016 21:12	PNG image	1 KB
VidIn_SRC_YUV_Ch0.png	12/08/2016 21:12	PNG image	1 KB
VidIn_SRC_YUV_Ch1.png	12/08/2016 21:12	PNG image	1 KB
VidIn_SRC_YUV_Ch2.png	12/08/2016 21:12	PNG image	1 KB
VidInTexture_Ch0_F0.png	12/08/2016 21:12	PNG image	176 KB
VidInTexture_Ch0_F1.png	12/08/2016 21:12	PNG image	169 KB
VidInTexture_Ch1_F0.png	12/08/2016 21:12	PNG image	1 KB
VidInTexture_Ch1_F1.png	12/08/2016 21:12	PNG image	1 KB
VidInTexture_Ch2_F0.png	12/08/2016 21:12	PNG image	1 KB
VidInTexture_Ch2_F1.png	12/08/2016 21:12	PNG image	1 KB
VidOut_CurrentOutput.png	12/08/2016 21:12	PNG image	349 KB
VidOut_FinalOutput0.png	12/08/2016 21:12	PNG image	338 KB
VidOut_RenderTexture0.png	12/08/2016 21:12	PNG image	183 KB
VidOut_RenderTexture1.png	12/08/2016 21:12	PNG image	178 KB

The names and numbers may vary depending on Swift/Tactic version and video configuration. There is also a possibility, depending on version, that this may not work or may hang/crash the program. Do not worry, just restart as normal and collect what images you see. Copy these into the AJA ISSUE folder.

8.6 AjA Send report

Zip up the AJA ISSUE folder and email this to support@rtsw.co.uk along with as detailed an explanation as possible.

Appendix - A - Breakout cables

Detailed diagram of the 102953 breakout cable for Corvid22 & Corvid24.

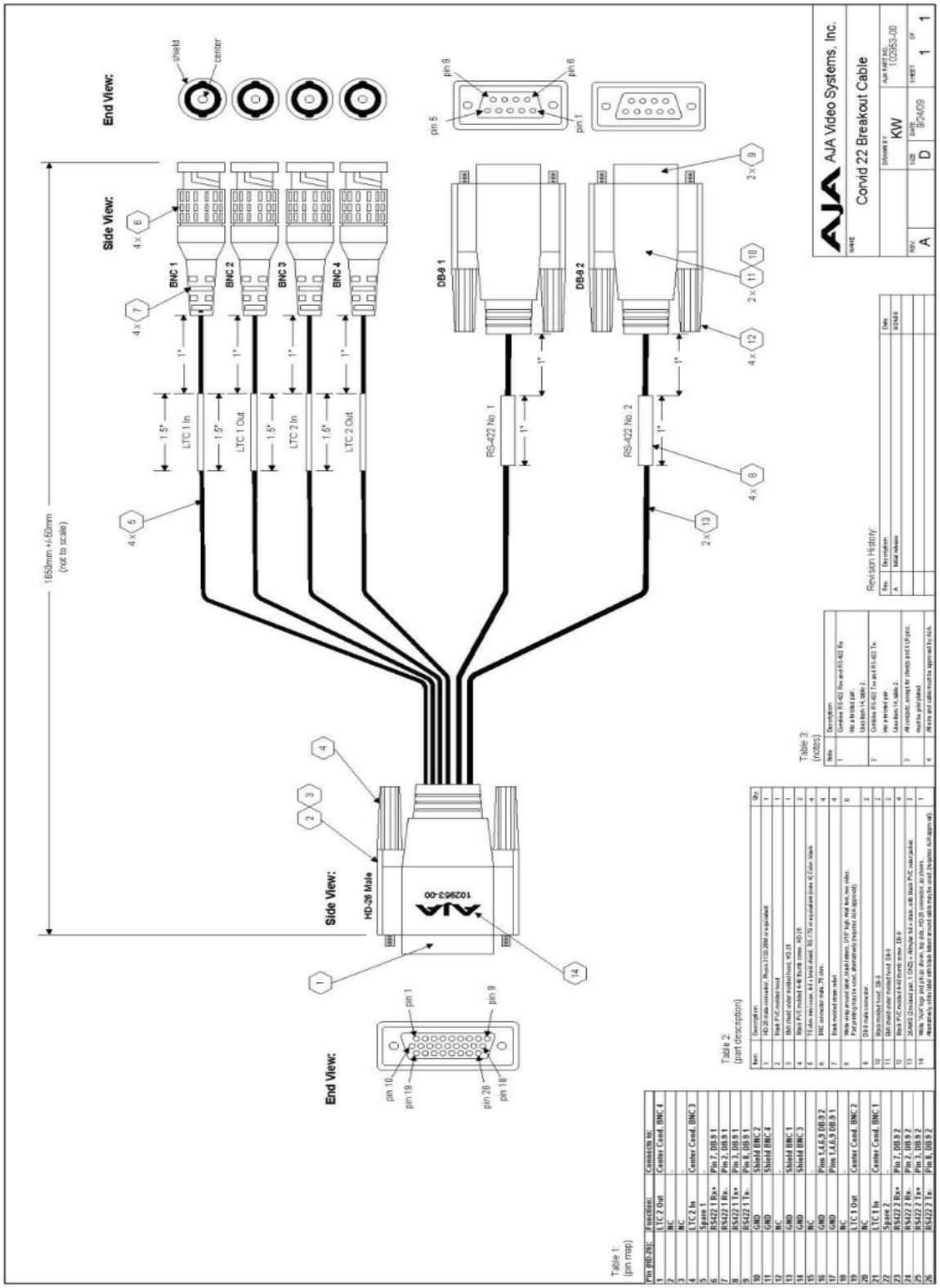

Detailed diagram of the 103226 breakout cable for the KONA™ 3G & KONA™ 4 (Part 1)

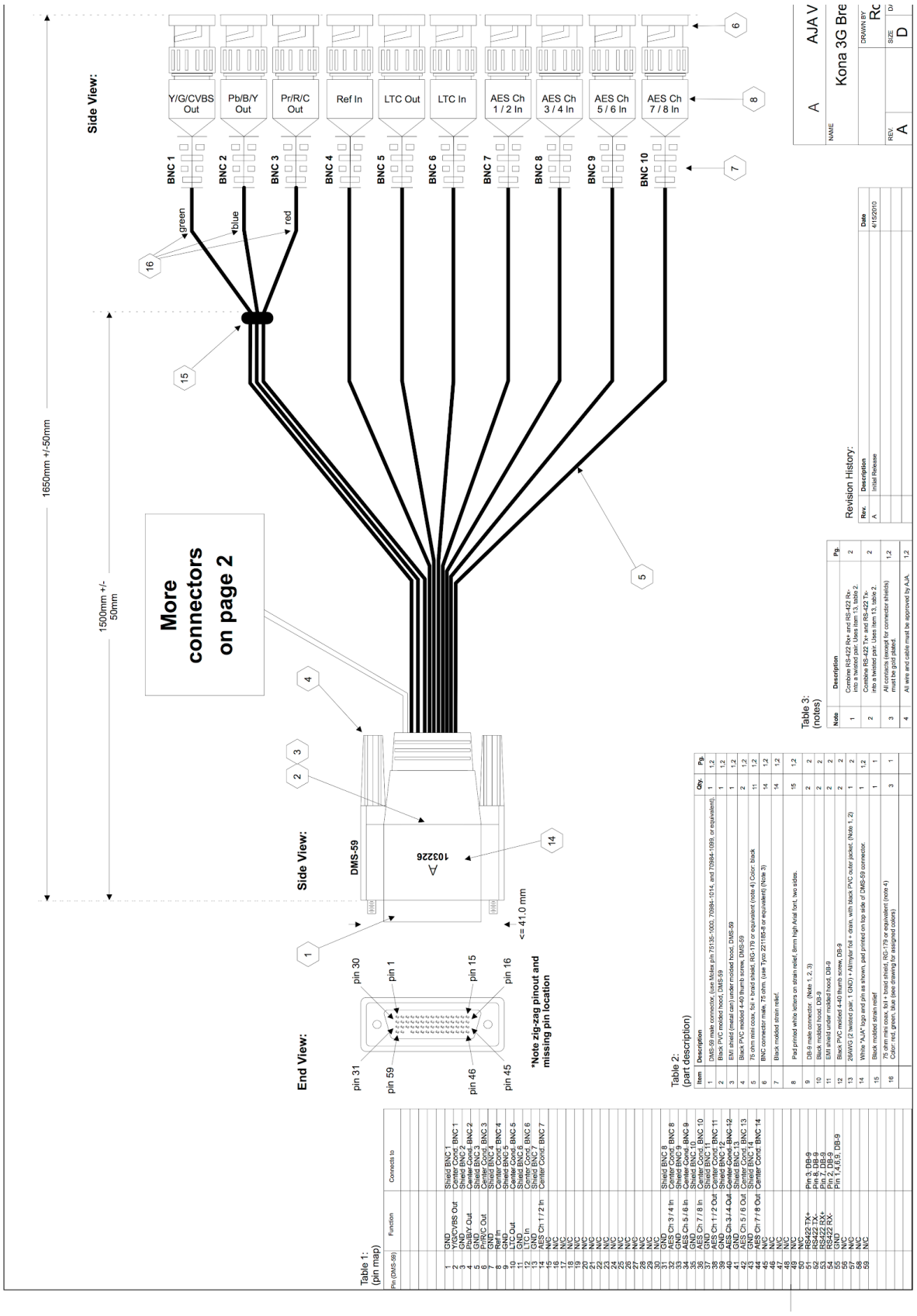

Detailed diagram of the 103226 breakout cable for the KONA™ 3G and

KONA™ 4 (part 2).

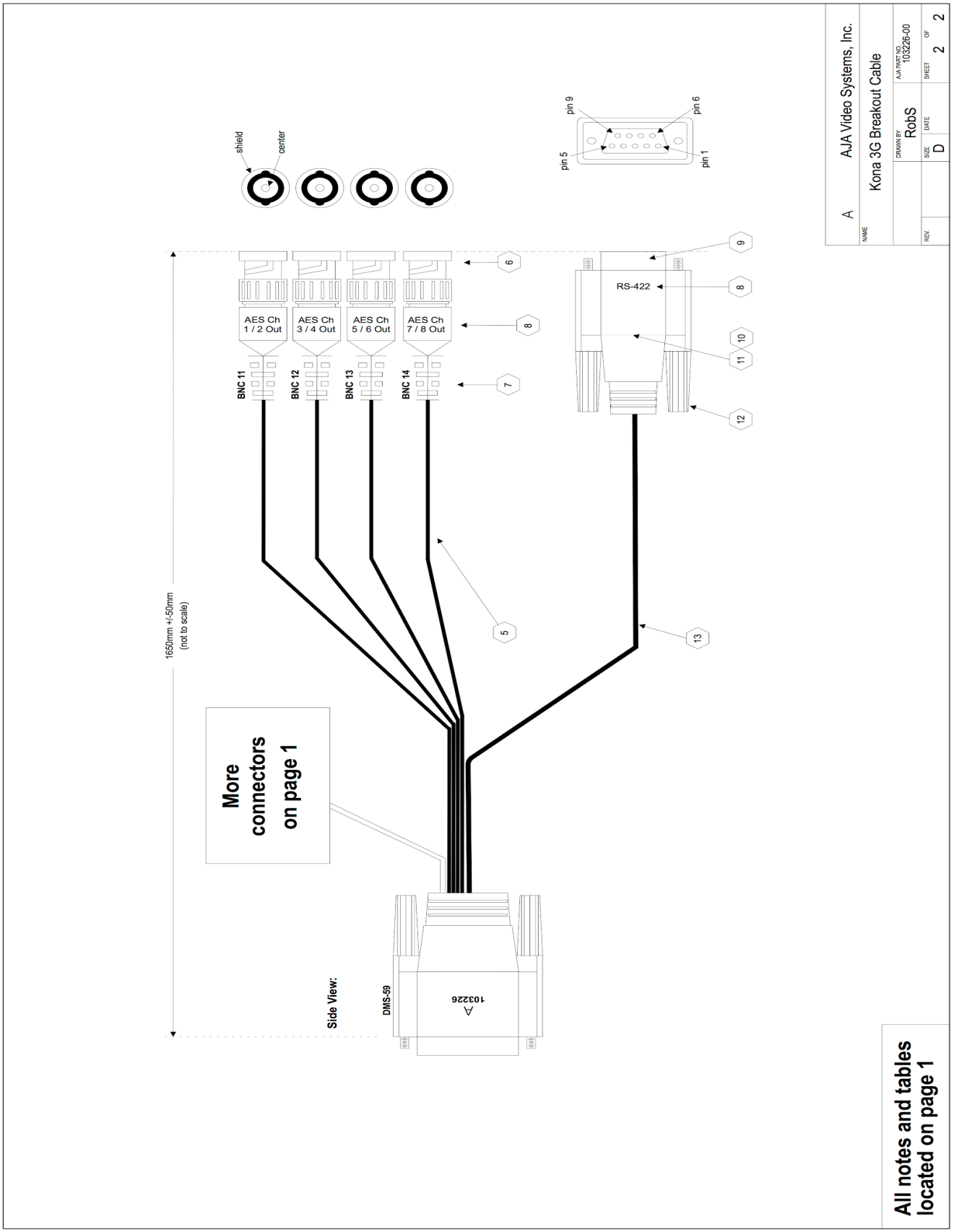
shield
center
pin 9
pin 6
pin 5
pin 1
AES Ch 1 / 2 Out
AES Ch 3 / 4 Out
AES Ch 5 / 6 Out
AES Ch 7 / 8 Out
BNC 11
BNC 12
BNC 13
BNC 14
RS-422
1650mm +/-50mm (not to scale)
More connectors on page 1
Side View:
DMS-59
103226
A
AJA Video Systems, Inc.
Kona 3G Breakout Cable
DRAWN BY RobS
AJA PART NO. 103226-00
SIZE D
SHEET 2 OF 2
All notes and tables located on page 1

Appendix - B Example use cases.

Below is detailed example uses for various cards. Note that cases should be evaluated on an individual basis.

Overlay Graphics 1in/1out No Key SD/HD Only Embedded Audio	Corvid
Overlay Graphics 1in/1out No Key SD/HD HD-3G Embedded Audio	Corvid 3G
Overlay Graphics 1in/1out Fill+Key SD/HD/3G Only Embedded Audio	Corvid 22
Overlay Graphics 2in/1out Fill+Key SD/HD/3G Only Video Pass Thru Failsafe	Corvid 24
Overlay Graphics 3in/1out Fill+Key SD/HD/3G Only Video Pass Thru Failsafe	Corvid 44
Overlay Graphics 3+in/1out Fill+Key SD/HD/3G Only Video Pass Thru Failsafe	Corvid 88
Sports 1in/1out SD/HD 1 Channel RecordToDisk	Corvid
Sports 2in/1out RS422 (Sony 9pin) LTC in	Corvid 24 (This is our DVS replacement)

2 Channel RecordToDisk	
Sports 3in /1out 3Channel recordToDisk	Corvid 44
Sports 4in/1out 4 channel Record to Disk	Corvid 88
Stitch 2xHD	Corvid 88
Stitch 2x4k	2x Corvid 88 Or 1x Corvid 88 1x Corvid 44

Laptop Support

Overlay Graphics 1in/1out Fill+Key SD/HD/3G Only Embedded Audio	Laptop + ThunderBolt ⅔ IoXT
Overlay Graphics 2in/1out Fill+Key SD/HD/3G Only Video Pass Thru Failsafe	Laptop + ThunderBolt ⅔ Io4k
Sports 1 in/1 out LTC RS422 Sony HDMI	Laptop + ThunderBolt ⅔ IoXT
Sports Laptop + ThunderBolt ⅔ 3 in/1 out LTC RS422 Sony HDMI	Laptop + ThunderBolt ⅔ Io4k